TECHNICAL GUIDANCE

CLAMP-ON TYPE

UL450

ULTRASONIC FLOWMETER

OUTLINE

UL450 Ultrasonic flowmeter by using the duration difference of ultrasonic wave transferred in moving fluid is capable of measuring a flow rate of metallic and plastic piping ranging from 25 to 1000mm in nominal diameter. A detector (an ultrasonic sensor) is mounted outside an existing piping by clamping method, so that it does not get into contact with the measuring fluid at all, and there are no concerns about the mixture of solid material and metallic ion into the fluid, the corrosion of sensor by chemical, and the pressure loss by installing the flow meter.

FEATURES

- The sensor of ultrasonic flowmeter UL450 is clamped on just outside of an existing pipe without any piping modification and time consuming installation work.
- Because of the noncontact measurement method, the formation of bubbles and the mixture of metallic ion have been completely prevented.
- Installing the flowmeter does not cause the pressure loss because of no obstacles in the measuring pipe.
- The ultrasonic flowmeter is not affected by the pressure or conductivity of fluids.
- Excellent in long-term stability because of no moving part.
- Providing the following functions : Forward/backward flow rate display, totalizing display, analog output, pulse output, status output.

MEASUREMENT PRINCIPLE

As shown in Fig. 1, an ultrasonic is transferred from A to B and B to A in turn with an angle of ψ. The required durations of transfer of two directions are different when measuring medium is moving from upstream to downstream. The durations of transfer are expressed by the following formula :

$$t_{AB} = 2L / V_{AB} = 2L / (C_o + V_m \cdot \cos \psi)$$

$$t_{BA} = 2L / V_{BA} = 2L / (C_o - V_m \cdot \cos \psi)$$

Where :

$2L$: Distance between A and B

V_m : Average velocity of medium

C_o : Sonic speed in stable medium

V_{AB}, V_{BA} : Transfer velocity of Ultra Sonic from A to B and B to A

t_{AB}, t_{BA} : Duration of transfer of Ultra Sonic from A to B and B to A

By measuring the difference of the transfer duration, the average velocity of medium can be calculated. The calculation is done by the following formula,

$$2V_m \cdot \cos \psi = 2L / t_{AB} - 2L / t_{BA}$$

$$= 2L (t_{BA} - t_{AB}) / (t_{BA} \times t_{AB})$$

$$\therefore V_m = L (t_{BA} - t_{AB}) / (\cos \psi \times t_{BA} \times t_{AB})$$

The distance between A and B (2L) and the angle (ψ) are known, and the average velocity is mathematically calculated. The flow rate can be calculated and output by V_m and piping area.

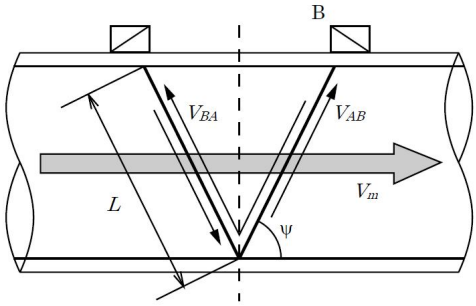

Fig. 1 MEASUREMENT PRINCIPLE

STANDARD SPECIFICATIONS

- Measuring method : Ultrasonic time-flight type (Ultrasonic path : Reflex mode / V path or Diagonal mode / Z path).
- Construction : Sensor, Converter, Coaxial cable, sensor fixing rail.
- Sensor mounting : Piping clamp-on type
- Measuring fluid : All Fluids, but excluding liquids containing high viscosity fluid, a lot of bubbles, and slurry.
- Measurable fluid sonic velocity range
  : 1000 ~ 2500 m/s
- Measurable fluid kinematic viscosity range
  : 0.30 ~ 40.00 mm^2/s
- Fluid temperature : Up to 90°C (Surface temperature of piping)
- Measurable pipe (Nominal diameter)
  : 25A(min) to 1000A (max)
- Measurable flow velocity range : 0 ~ 10 m/s
- Settable full scale flow velocity range
  : min 0.3 m/s ~ max10m/s
- Accuracy : ±2% of the reading at the condition that flow velocity is 1m/s or more and Reynolds number is 10000 or more.
  : Flow velocity error is ±2 cm/s(excluding the condition mentioned above).
- Display : 16-digit, 2-line alphanumeric LCD (with backlight) and status display LEDs (3 pieces)
  ※Display data : Flow rate, totalizing flow rate, various status
- Power supply : 100 to 240 V AC 50/60Hz
  (85 to 264 V, AC50/60Hz is acceptable)
  DC20 ~ 30V
- Power consumption : 12 VA or less (AC Type)
  6W or less (DC Type)
- Cable entry : For power/output with waterproof cable gland
- Insulation resistance : CASE to all input/output terminals
  100MΩ/ 500VDC.
  Power terminal to all input/output terminals
  100MΩ / 500VDC.
  Ground terminal to all input/output terminals
  100MΩ / 500VDC
- Withstand voltage : CASE to all input/output terminals
  1000VAC,1min.
  Power terminal to all input/output terminals
  1000VAC, 1min
  Between all input/output terminals
  500VAC, 1min.
- Outputs
  1）Analog output DC4 ~ 20mA Load resistance : 500Ω or less
  2）Pulse output Open collector output
  Load rating DC30V,50mA.Low level 2V or less.
  Settable PULSE width : 0.5ms (Max.1000pps),
  50ms (Max.10pps),
  100ms (Max.5pps),
  500ms (Max.1pps),
  1s (Max.0.5pps).
  3）Status output Open collector output
  Load rating DC30V,50mA、Low level 2V or less
  Two functions selectable among Alarm(flowrate, totaling value), Empty pipe detection, Forward or backward flow detection etc.
  4) Serial output RS-485 serial output, Modbus protocol
  Baud rate 2400 、 4800 、 9600 、 19200 、 38400bps Transmission distance : 1.2km (Max. total distance at the time of multi-drop connection)
  Slave addresses : 1 to 31
- Damping setting : 0 ~ 100s(Settable in increments of 1s step)
  ※ Valid for display, analog output and pulse output. There is a response delay of 0.5 s, even if damping is set to 0 s.
- Low cutoff setting : 0 ~ 30% of the maximum flow rate(Settable in increments of 1%)
  ※Valid for display, analog output and pulse.
- Parameter setting : Set with the key switches on the front panel of converter.
- Other additional functions : Analog and pulse simulation output function
- Converter mounting method : Mounted onto the wall or 2 inch pipe.
- Enclosure : Converter and Sensor equivalent to IP65.
- Material : Sensor housing / PBT
  Sensor mounting rail / Aluminum Converter
  Converter housing / Heat-resisting ABS
- Sensor ambient temperature : -10 ~ 70℃
- Ambient temperature and humidity
  : -25 ~ 50℃ / 10 ~ 90%RH (No dew condensation)
- Sensor signal cable : Standard 10m (max 50m)

Table 1. Sensor selection table

Pipe material	Nominal pipe size D	Sensor type	Sensor installation	Sensor rail length	Sensor rail for support	Code of sensor combination
SUS (t ≦ Sch40)	25A ≦ D ≦ 40A	A (2MHz)	V	320×1	NA	2
	50A ≦ D ≦ 150A					2
	200A ≦ D ≦ 400A	A (2MHz)	Z	620×2		4
		B (1MHz)		320×2		5
	450A ≦ D ≦ 1000A	B (1MHz)		620×2		4
SGP	25A ≦ D ≦ 65A	A (2MHz)	V	320×1	NA	2
	80A ≦ D ≦ 150A		Z	320×2		5
	200A ≦ D ≦ 400A	B (1MHz)	Z	320×2		5
	450A ≦ D ≦ 1000A			620×2		4
SGPW (galvanize)	25A ≦ D ≦ 65A	A (2MHz)	V	320×1	NA	2
	80A ≦ D ≦ 150A		Z	320×2		5
	200A ≦ D ≦ 400A	B (1MHz)	Z	320×2		5
	450A ≦ D ≦ 1000A			620×2		4
STPG	25A ≦ D ≦ 65A	A (2MHz)	V	320×1	NA	2
	80A ≦ D ≦ 150A		Z	320×2		5
	200A ≦ D ≦ 400A	B (1MHz)	Z	320×2		5
	450A ≦ D ≦ 1000A			620×2		4
PVC / PE	25A ≦ D ≦ 40A	A (2MHz)	V	320×1	320×1	1
	50A ≦ D ≦ 150A			320×1	NA	2
	200A ≦ D ≦ 300A	A (2MHz)	Z	320×2		5
		B (1MHz)		320×2		5
	350A ≦ D ≦ 800A	B (1MHz)		620×2		4
PP (t ≦20mm) PVDF (t ≦12mm)	25A ≦ D ≦ 40A	A (2MHz)	V	320×1	320×1	1
	50A ≦ D ≦ 80A		Z	320×2	NA	5
	100A ≦ D ≦ 400A	B (1MHz)	Z	320×2		5
PE lining	25A ≦ D ≦ 40A	A (2MHz)	V	320×1	NA	2
	50A ≦ D ≦ 400A	B (1MHz)	Z	320×2		5
	450A ≦ D ≦ 1000A			620×2		4

Note 1 : When the resin pipes are not mentioned above, consult us in advance.

Note 2 : When the measuring pipes are sch.80 or more including stainless steel pipe, consult us in advance.

Note 3 : ”V” in the sensor installation column denotes V path, reflex mode and ”Z” denotes Z path, diagonal mode.

Note 4 : The sensor rail for support is used for the pipes made of resin with 50A or less

Note 5 : V path, reflex mode is generally used for the pipes with 400 mm or less. However, there are some cases where Z path, diagonal mode is adequate depending on the pipe material or surface conditions of the pipe and fluid. If such situation is expected, select the sensor rails with 2 pieces in advance.

Note 6 : When the size of measuring pipes are unknown or especially expected to be more than 100 mm or more possible piping change, select the long sensor rail,with combination code of [1 or 2] as the short sensor rails may not work well .

Note 7 : See the MODEL CODE for the sensor combination.

Sensor Dimensions

· **Wall mounts type**

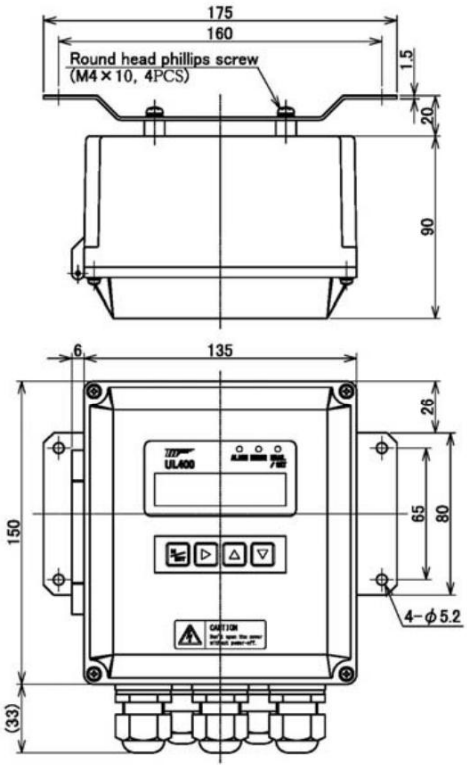

· **2B mounts type**

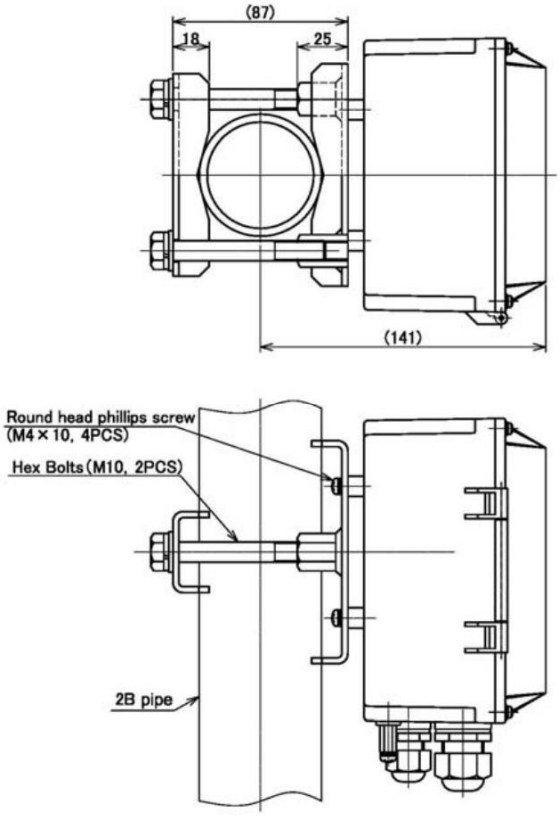

SENSOR

· **Reflex mode (V path)**

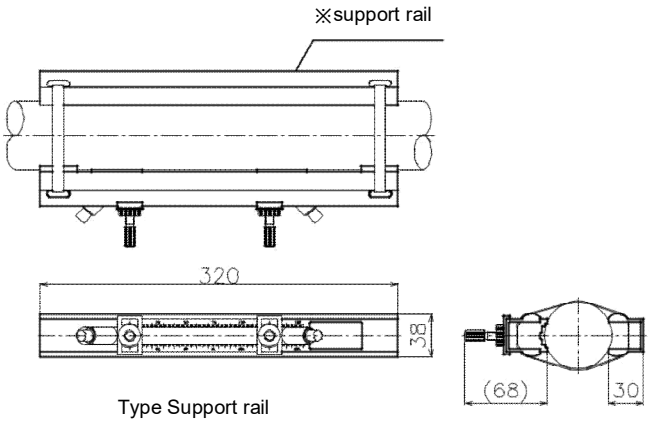

Type Support rail

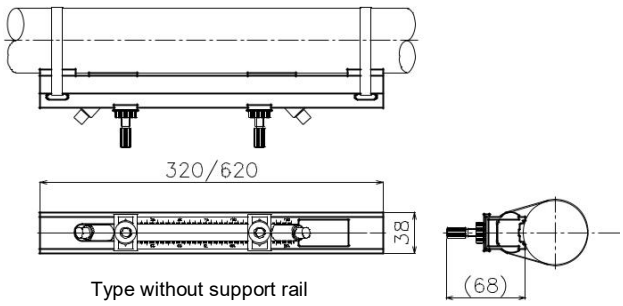

Type without support rail

· **Diagonal mode (Z path)**

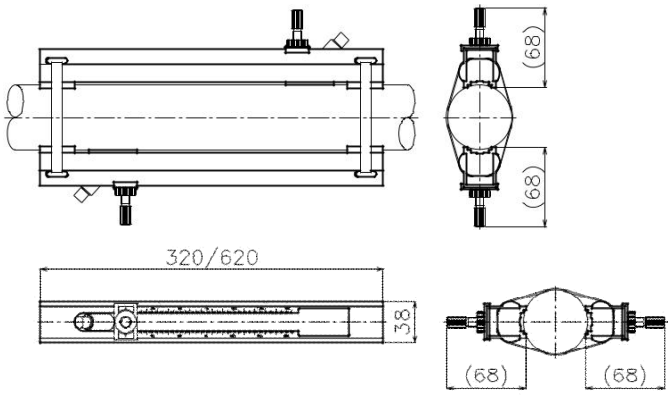

※Support rail is used for the resin pipe from 25A to 50A.

※Refer to table 1 Sensor selection table。

FLOW RATE RANGE/SIZE

Nominal diameter (mm)	Possible scale range (m^3/h) Minimum	Maximum
25A	0.684	22.80
32A	1.167	38.91
40A	1.568	52.27
50A	2.556	85.21
65A	4.192	139.7
80A	5.857	195.2
100A	9.948	331.6
125A	15.00	500.1
150A	21.28	709.4
200A	36.80	1226
250A	57.07	1902
300A	81.25	2708
350A	101.3	3377
400A	133.2	4442
500A	209.5	6984
600A	0.301(km^3/h)	10.06(km^3/h)
700A	0.409(km^3/h)	13.66(km^3/h)
800A	0.538(km^3/h)	17.95(km^3/h)
900A	0.684(km^3/h)	22.82(km^3/h)
1000A	0.843(km^3/h)	28.10(km^3/h)

[Note]

※The above-mentioned flow rates have been calculated for the SUS Sch. 10s pipes, at the minimum range flow velocity of 0.3 m/s and maximum range flow velocity of 10 m/s.
(The flow rate range may differ slightly, depending on the piping standard.)

WIRING DIAGRAM

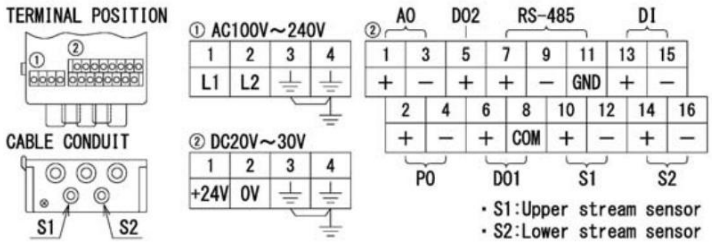

MODEL CODE

・ **Sensor**

Sensor model code					Description
UFS450	A				2MHz
	B				1MHz
Combination of SENSOR		1			Short sensor rail×1, Sensor rail for support×1
		2			Short sensor rail×1
		3			Long sensor rail×1
		4			Long sensor rail×2
		5			Short sensor rail×2
CABLE length			1		10m(standard)
			2		20m
			3		30m
			4		40m
			5		50m
Additional functions(Blank)				(Blank)	NA
				/Z	Provided

・ **Converter**

Converter model code					Description
UFC450					
Power supply	A				AC100 ~ 240V 50 / 60Hz
	D				DC20~30V
Mounting		1			Wall mount type
		2			2“ pipe mount type
Serial output			1		Standard
			-		
Additional functions (blank)				(blank)	NA
				/Z	Provided

POINTS TO BE CHECKED BEFORE USING

It may be unable to make measurement when falling into the following conditions, Contact us in advance. When it cannot be judged whether it is suitable, we are prepared to make preliminary test by the actual equipment.

1) Liquid

- The liquid containing a lot of bubbles (over 2% volume)
- The liquid containing slurry and solid material (over 5wt%)
- The liquid of low Reynolds number (less than Re.10000)
- Liquids other than water such as lean chemical solutions, oils, waste waters and hot spring water.

2) Piping

- The inside wall of carbon steel pipe is rusty.
- Adhesion and sediment are in a pipe.
- The liner of PVC pipe has no good adhesion property, or gap between pipe and liner.
- The outside surface of cast iron pipe is coarse.
- The wall thickness of PVDF pipe is over 12mm.
- The wall thickness of PP pipe is over 20mm.
- SGPW pipe [The galvanized steel pipe for water service (white gas pipe)

3) Straight runs

The accurate flow measurement requires straight runs both upstream and downstream of the flow sensor as shown at the next page.

PRECAUTION FOR USE

1) Pipe shall be always filled with fluid.
2) In the case of horizontal piping, please do not mount a sensor on the upper and the lower part of piping.
3) When you wrap a sensor in an insulating material, be careful not to exceed the ambient temperature limits of a sensor.
4) In order to prevent the sensor grease from degrading when installed outside, we recommend you to mount the waterproof cover which covers a sensor assembly.

Product counseling and service

1) Questions regarding the purchase request of products and after-sales service will be answered by designated dealers in each region.
2) Technical problems about products will be directly solved by the manufacturer " Nissoku Hi-Tech Co. Ltd."
Technique service window: nissoku@nissoku.com.tw

REQUIRED STRAIGHT RUNS

D : Nominal diameter

Division	Upstream Straight Pipe Length	Downstream Straight Pipe Length
90°Bend	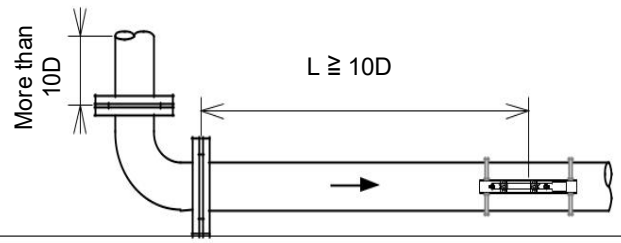	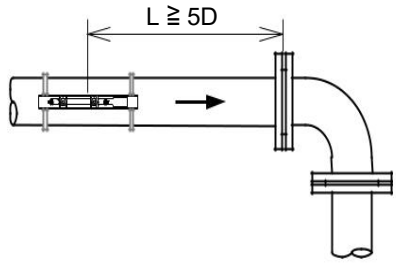
Tee	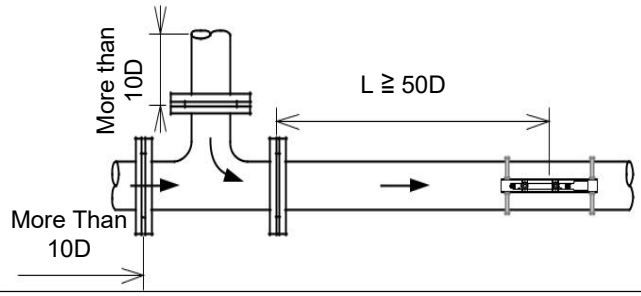	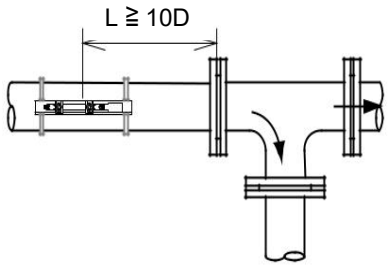
Expansion Pipe	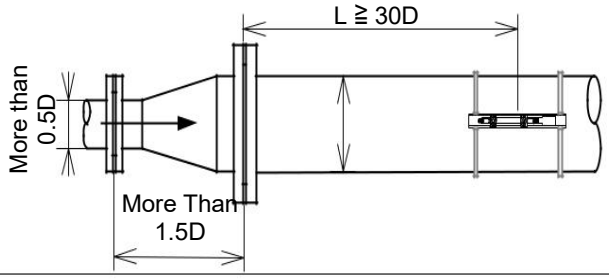	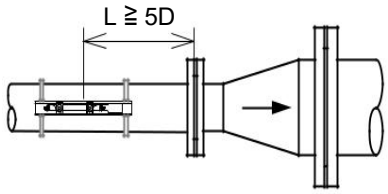
Reducer	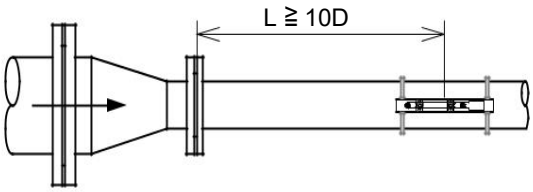	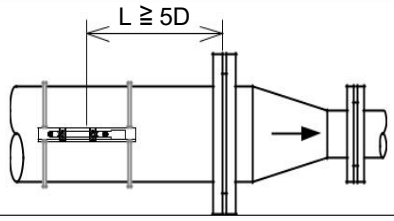
Valve	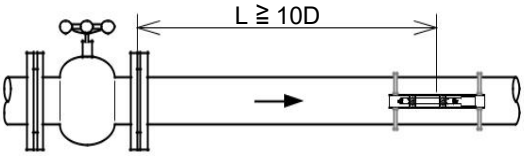 Valve throttling at the upstream	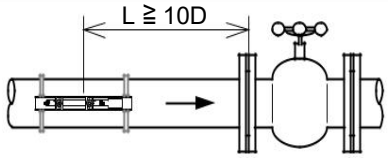 Valve throttling at the downstream
Pump	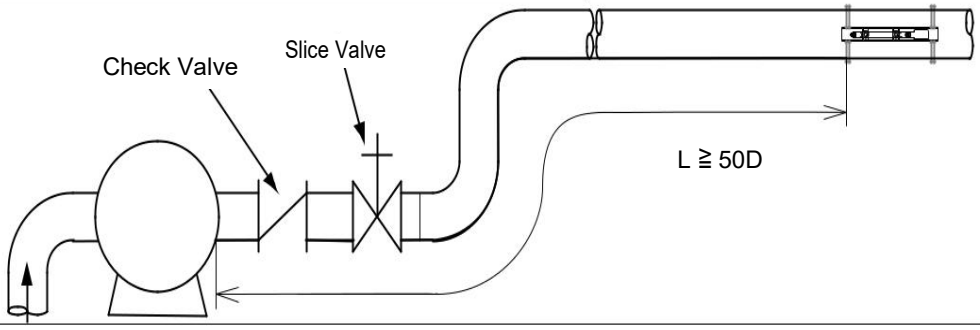	

Reference : JEMIMA standard JEMIS-32